Item No.	Trap Tag No.	Size	Rating	CONN.	A	B	C	D	F	G	BOLT/NUT		Q'TY	Remark
											Size	Q'TY		
TS-S10A 3.5/304		10A	N/A	NPT	37	27	60	24	14	29	N/A	N/A	1	

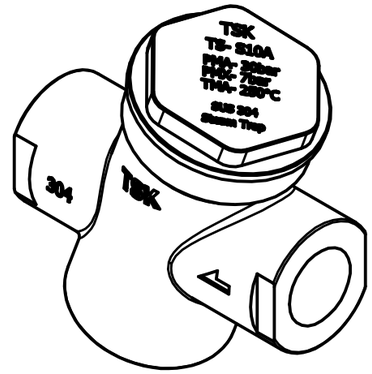

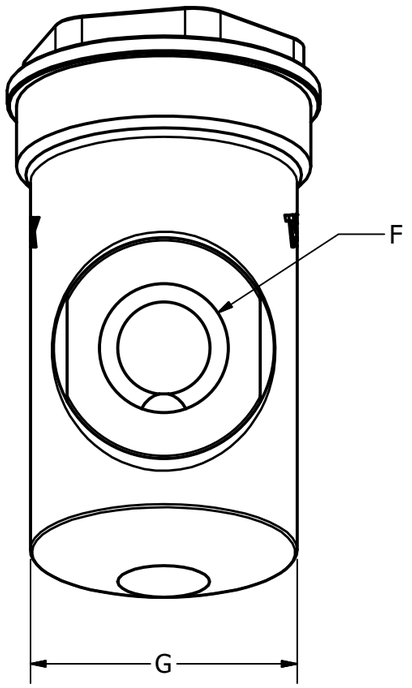

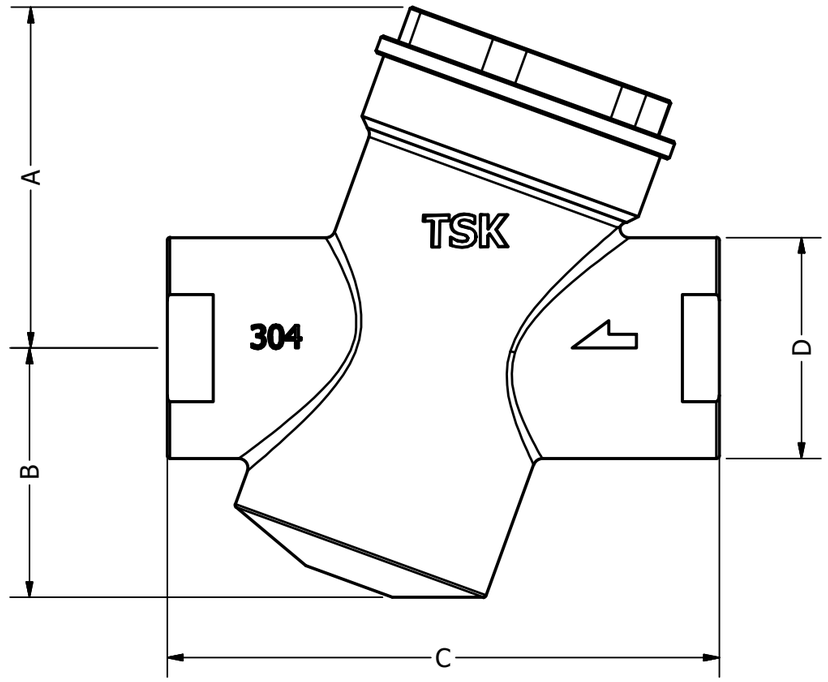

0	Jul. 02. 2024	First Issue	CJ Oh	SM Cho	CK BAIK
Rev	Date	Description	DWN	CHK	APP

TSK Co., Ltd.

TS - S10A Bellows Type Steam Trap

TS-S10A

Scale	NTS	DWG No.	TS-S10-M01